XP6500E

GENERAC®

XP SERIES
Commercial/Residential
Portable Generators

A/C Rated Output Watts: 6500

A/C Maximum Output Watts: 8125

Model 5934

UPC Number: 696471059304
Emissions Certification: CARB

features

- FULL PANEL GFCI PROTECTION-OSHA COMPLIANT
- IDLE CONTROL SAVES FUEL AND REDUCES NOISE
- 120/240V SELECTOR SWITCH FOR FULL 120V POWER
- INTEGRATED LIFTING EYE FOR TRANSPORT AND SECURITY
- GENERAC OHVI ENGINE, FULL PRESSURE LUBRICATION
- LOW-OIL PRESSURE SHUT-DOWN PROTECTION
- ALL ENGINE CONTROLS LOCATED ON OUTLET PANEL
- LOCKING FOLD-DOWN HANDLES AND NEVER-FLAT WHEELS
- FULL-WRAP, 1¼" HARDENED STEEL TUBE CRADLE
- ELECTRIC START W/RECOIL BACKUP, BATTERY INCLUDED

customer connections

Connection Outlets

A	(4) 5-20R 120V
B	1xL5-30R
C	1xL14-30R

Circuit Breakers

M	(2) 20A
N	(1) 30A
O	(1) 30A

Other Features

H	Full Panel GFCI Module
I	120/240 Volt Selector
J	Idle Control
K	Choke
L	Fuel Cut-Off

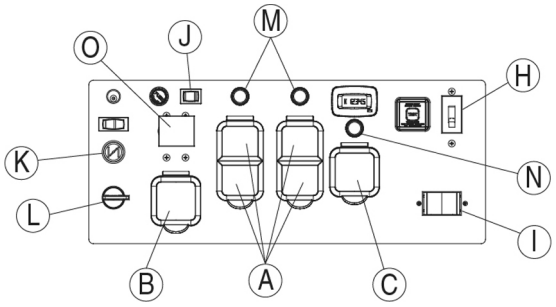

XP6500E

specifications

Product Series	XP6500E
Model	5934
Configuration/Emissions	CARB
A/C Rated Output Watts:	6500
A/C Maximum Output Watts:	8125
A/C Voltage	120/240VAC
A/C Frequency	60 Hz
Rated 120/240 VAC Amperage	27.1
Max 120/240 VAC Amperage	33.9
Engine Displacement	410cc
Engine Type	OHVI
Engine RPM	Variable
Recommended Oil	SAE 30
Lubrication Method	Full Pressure
Choke Type	On Control Panel
Fuel Shut Off	On Control Panel
Idle Control	Yes
Starting Method	Electric/Manual
Battery	Included
Battery Size	12VDC 10 Ahr
Low Oil Shutdown Method	Low Pressure

Start Switch Type	3-Position
Switch Location	On Control Panel
Single-Point Lifting Eye	Included
Fuel Gauge	Built-in Tank
Fuel Tank Capacity (Gal)	9
Fuel Tank Capacity (Ltrs)	34.07
Run Time at 50% (Hours)	11.00
Cord Set	N/A
Handle Style	Folding Interlocked
Wheel type	10.5" Semi-Solid Wheels
Maintenance Kit	Included
Warranty - Residential	3 Year
Warranty - Commercial	3 Year

dimensions and weights

Length (L)	34.6
Width (W)	29.0
Height (H)	27.2
Extended Length (EL)	48.5
Carton Length	38.0
Carton Width	23.0
Carton Height	24.8
Unit Weight (lbs)	241.0
Shipping Weight (lbs)	268.0

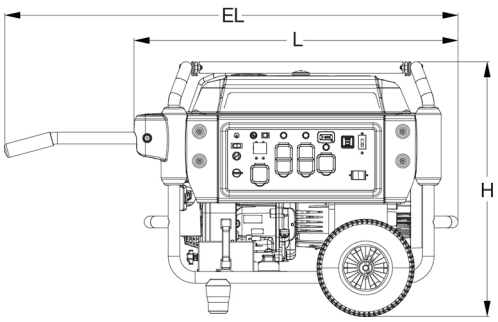

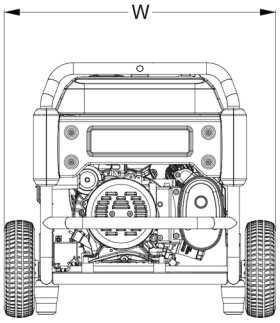

© 2011 Generac Power Systems, Inc. All rights reserved. All specifications are subject to change without notice. Bulletin 0190500SBY/Printed in U.S.A.10/5/2011